The Hatch

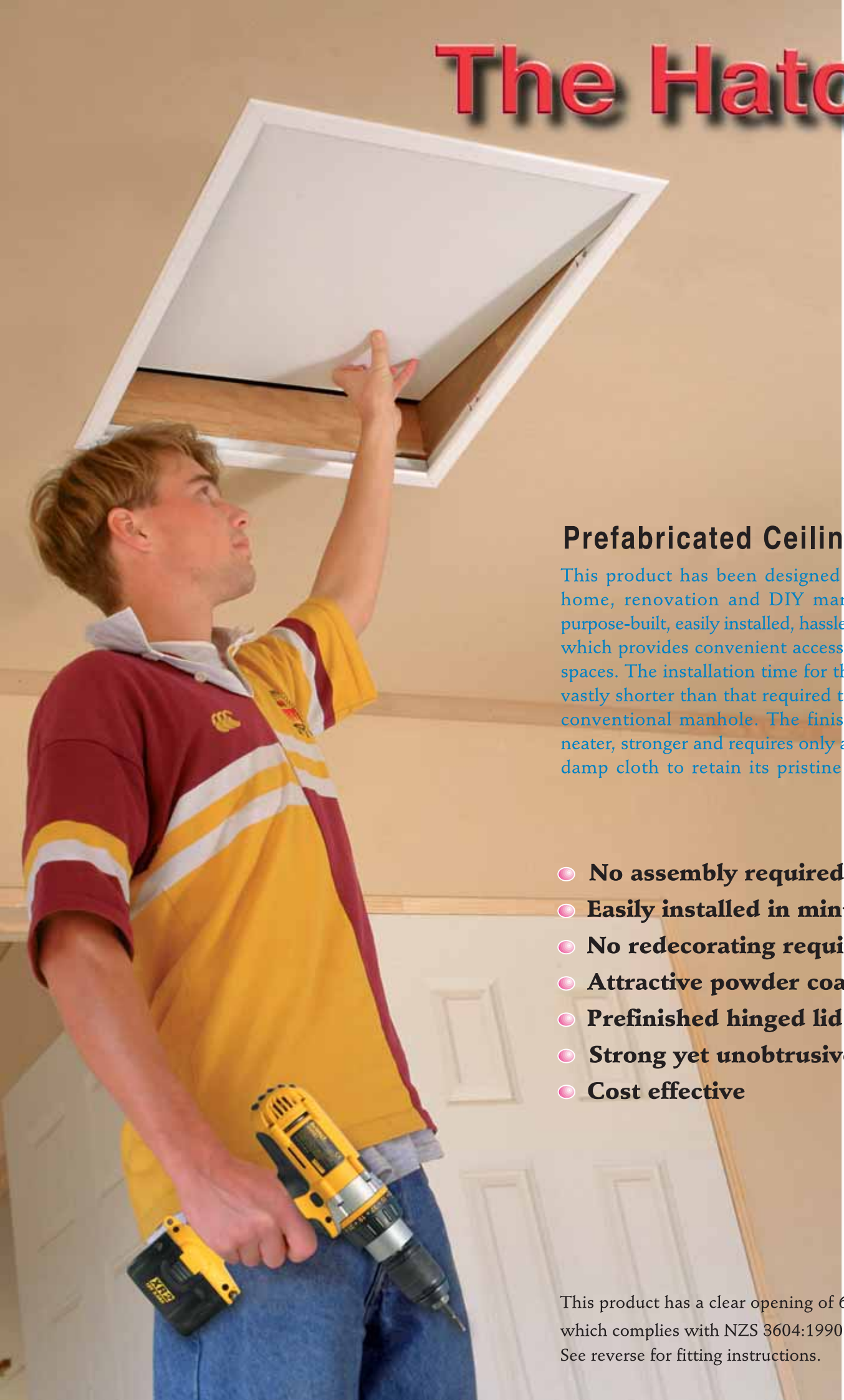

Prefabricated Ceiling Hatch

This product has been designed for the new home, renovation and DIY markets. It is a purpose-built, easily installed, hassle-free solution which provides convenient access to all ceiling spaces. The installation time for this product is vastly shorter than that required to construct a conventional manhole. The finished result is neater, stronger and requires only a wipe with a damp cloth to retain its pristine appearance.

- **No assembly required**
- **Easily installed in minutes**
- **No redecorating required**
- **Attractive powder coat finish**
- **Prefinished hinged lid**
- **Strong yet unobtrusive**
- **Cost effective**

This product has a clear opening of 600 x 500mm, which complies with NZS 3604:1990 clause 12.3.1. See reverse for fitting instructions.

INSTALLATION

1. Trim opening to 635mm x 535mm.
2. Support ceiling lining on all sides of opening.
3. After trimming, delay installation until all trades and ceilings are finished.
4. For ease of installation, remove lid from frame by sliding pin back on the spring loaded hinge. (see diagram A)
5. Install "The Hatch " frame through all fixing points, while holding firmly to ceiling.
6. Replace lid by locating fixed hinge and depressing spring loaded hinge into holes at EITHER end of frame.
7. Position a batten at hinge end to prevent lid opening unnecessarily past vertical and causing damage. (see diagram B)

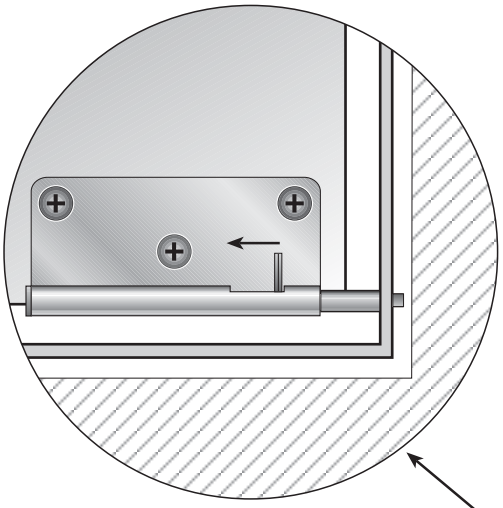

Diagram A

Diagram B

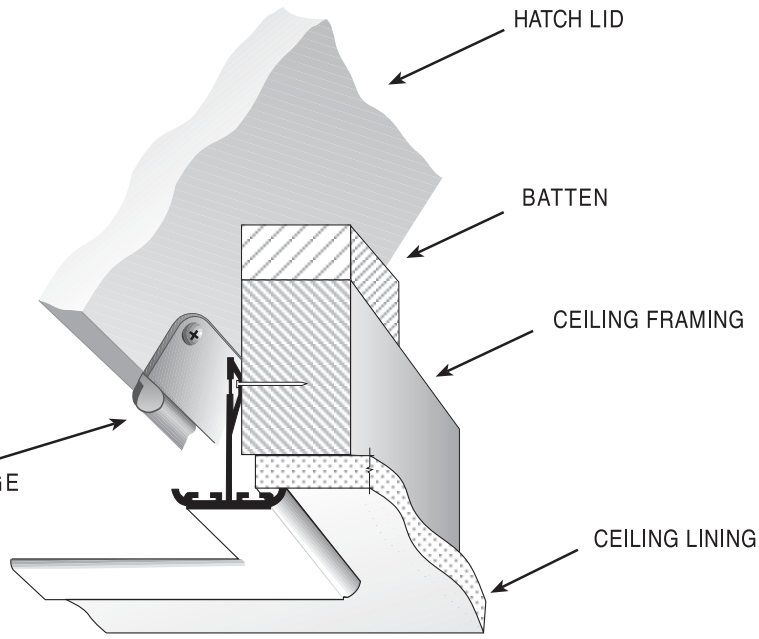

The Hatch

Proudly manufactured in New Zealand by :

PRODUCTION SYSTEMS LTD
PO Box 55-005, Mission Bay, Auckland 1130.
Ph: 09-483-6373, Fax: 09-483-6356, Mobile: 025-750-888. Email: tony@productions.co.nz