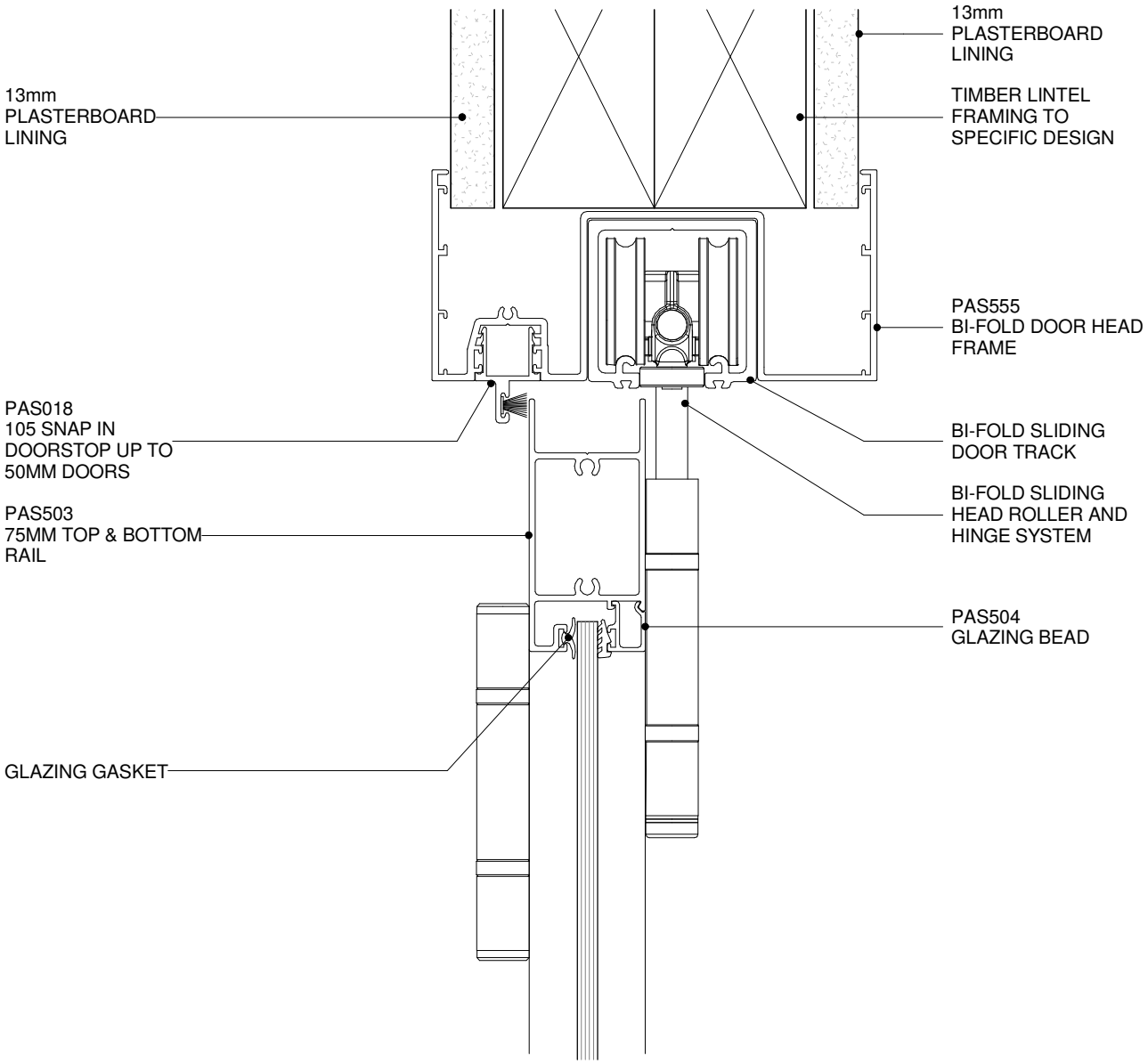

POTTER ALUMINIUM SYSTEMS
DS SERIES - BI-FOLD - 75MM DOOR HEAD
CROSS SECTION

5.6.15	1 : 2	A 23/01/19	0800 POTTER (0800 768 837) WWW.POTTERS.CO.NZ
SHEET	SCALE	ISSUED DATE	SUBJECT TO CHANGE WITHOUT NOTICE